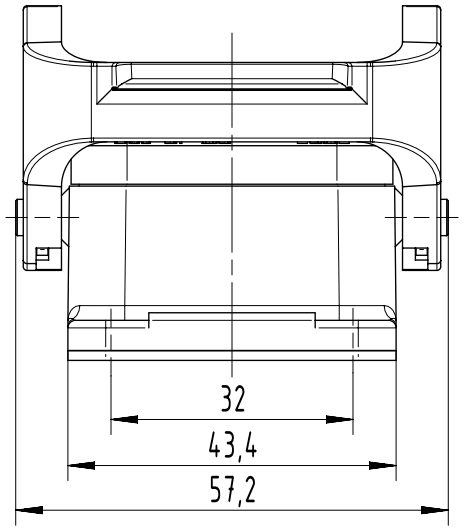

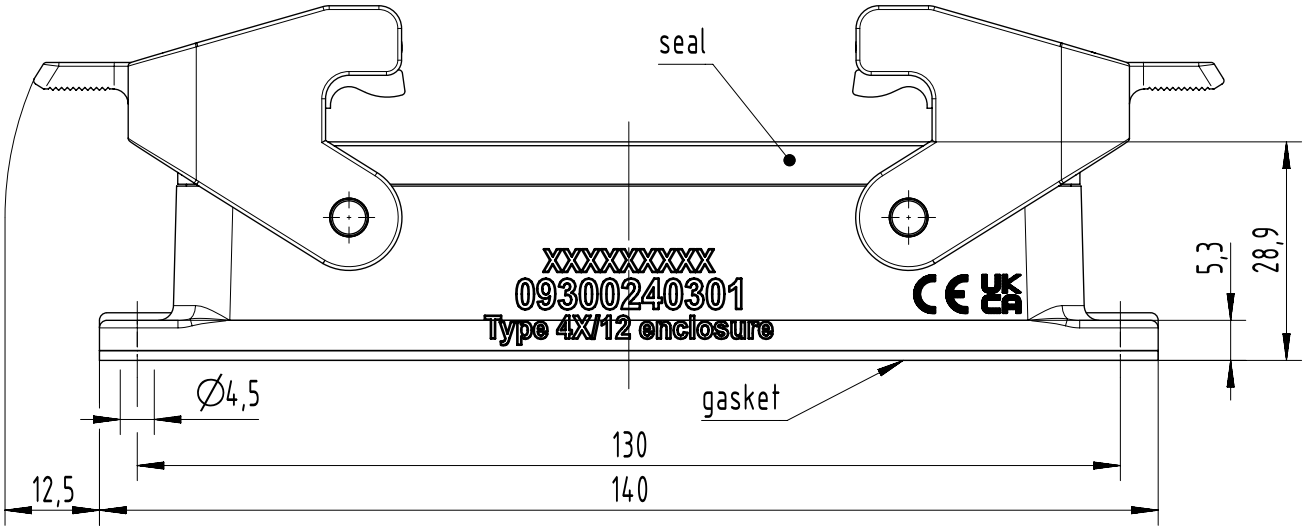

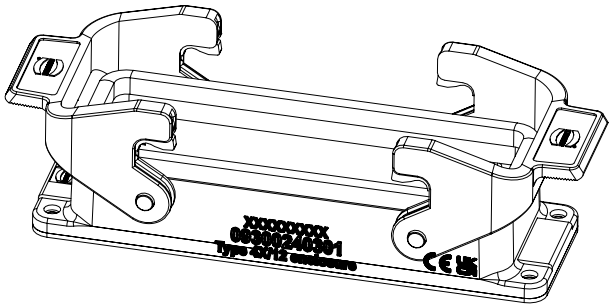

(1:2) panel cut out

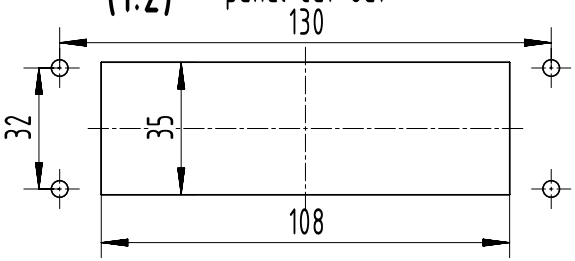

All Dimensions in mm Original Size DIN A4	Scale 1:1	Free size tol.		Ref. Sub.	
All rights reserved Department EL PD	Created by SPREENB	Inspected by GERB	Standardisation	Date 04-Apr-2025	State 40 - Released
	Title Han 24B-agg-QB				Doc-Key / ECM-Nr. 100199035/UGD/007/D 500000251429
HARTING D-32339 Espelkamp	Type TB	Number 09300240301		Rev. D	Page 1/1

A4